Institute of Technology of Cambodia

Département Of Industrial and Mechanical Engineering

Subject: Power Electronics

Lecture: **M. Rathana San (Couse et TD)**

Group: I4-GIM-A1

Student:	**ID**
1. CHAO SIVCHHUONG	e20220409

Year 2025-2026 Type equation here.`

Chapter2: Exercise

1. In this problem, we will calculate new values of the turn-on and the turn-off delay times of the MOSFET, based on the gate driver IC IR2127, as described in section 2-4-4. This IC is supplied with a voltage $V_{ext} = 12V$ with respect to the MOSFET Source. Assume this voltage to equal V_{GG}•

a) For the turn-on, assume that this driver IC i s a voltage source of V_o with an internal resistance of 60Ω in series. Calculate the turn-on delay time $t_{d(on)}$ assuming that the MOSFET threshold voltage $V_{GS(th)} = 3V$. Assume the MOSFET capacitance to be $1190\ pF$ for this calculation.

b) For turning-off of the MOSFET, assume that this driver IC shorts the MOSFET gate to its source through an internal resistance of 3052. Calculate the turn-off delay time alad), assuming that the MOSFET voltage $V_{GS(I_o)} = 4.5V$. Assume the MOSFET capacitance to be $1900\ pF$ for this calculation.

Solution

a) $\text{Findtheturn} - \text{ondelaytime } t_d(\text{on})$

We have : $V_{ext} = 12V$

$V_{GS} = 3V$

$R = 60\ \Omega$

$`C = 1190pF = 1.19 \cdot \dot{1}0^{-}9\ F$

Formula for RC charging circuit: $V_g(t) = V_{ext} \cdot \left(1 - e^{\left(-\frac{t}{RC}\right)}\right)$

$$\Rightarrow e^{\left(-\frac{t}{RC}\right)} = 1 - \frac{V_g(t)}{V_{ext}}$$

$$\Rightarrow t_d(\text{on}) = -RC \cdot \ln\left(1 - \frac{V_g(t)}{V_{ext}}\right)$$

$$= -60 \times 1.19 \cdot 10^{(-9)} \times \ln\left(1 - \frac{3}{12}\right) = 20.6\ \text{ns}$$

$`\text{Thus, Theturn} - \text{ondelaytime} t_d(\text{on}) = 20.6\ \text{ns}\ .$

b) $\text{Calculatea the turn} - \text{off delay timre } t_d(\text{off})$

Given : $R = 305\Omega$

$`C = 1900pF = 1.9 \times 10^{-}9F$

$V_{GS} = 4.5V$

Formula for RC charging circuit: $V_g(t) = V_{ext} \cdot \left(1 - e^{\left(-\frac{t}{RC}\right)}\right)$

$$\Rightarrow e^{\left(-\frac{t}{RC}\right)} = 1 - \frac{V_g(t)}{V_{ext}}$$

$$\Rightarrow t_d(on) = -RC \cdot \ln\left(1 - \frac{V_g(t)}{V_{ext}}\right)$$

$$= -305 \times 1.9 \cdot 10^{(-9)} \times \ln\left(1 - \frac{3}{4.5}\right) = 234.8 \text{ ns}$$

`Thus: The turn − on delay time $t_d(on) = 234.8$ ns .

Chapter3: Exercise

1. In a Buck dc-dc converter, $L = 50\mu H$. It is operating in dc steady state under the following conditions: $V = 40V, D = 0.3, P_o = 24W, and\ f_s = 200kHz$. Assume ideal components.
   1. Calculate and draw the waveforms as shown in Fig. 3-3d.
   2. Draw the inductor voltage and current waveforms if $P_o = 12W$; all else is unchanged. Compare the ripple in the inductor current with that in Problem 3-1.
2. In a Boost converter, $L = 50\mu H$. It is operating in dc steady state under the following conditions: $V_n = 12V, D = 0.4, P_o = 30W, and\ f_s = 200kHz$. Assume ideal components.
   1. Calculate and draw and the waveforms as shown in Fig. 3-5c.
   2. Draw the inductor voltage and current waveforms, if $P_o = 15W$; all else is unchanged. Compare the ripple in the inductor current with that in Problem 3-7.
   3. In this Boost converter, the output load is changing. Calculate the critical value of the output load P_o below which the converter will enter the discontinuous conduction mode of operation.
   4. Calculate the critical value of the inductance L below which this Boost converter will enter the discontinuous conduction mode of operation a t $P_o = 5W$.

Solution

1. The Buck Dc-Dc converter

We have $L = 50\ \mu H = 50 \cdot 10^{-}6\ H$

$V_{in} = 40V$

$D = 0.3$

$P_0 = 24W$

$f_s = 200KHz = 200 \cdot 10^5 Hz \Rightarrow T_s = \frac{1}{f_s} = 5\mu s$

Case study : Ideal components (No losses, perfect components like switching…)

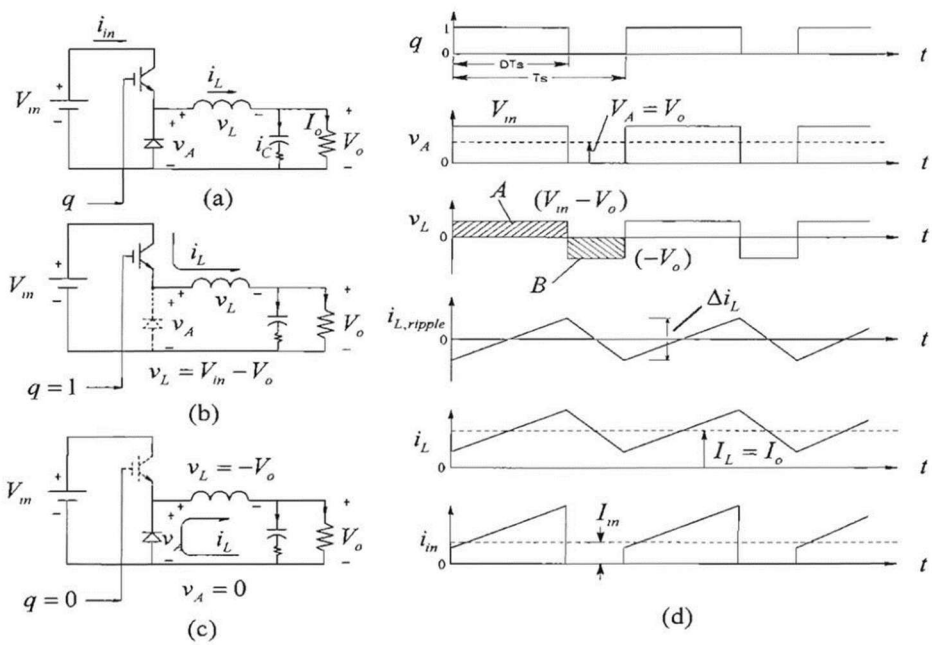

Figure 3-3 Buck dc-dc converter.

1) Calculate and draw the waveforms

- For $P_0 = 24W$

Output voltage: $V_0 = D \times V_{in} = 0.3 \times 40 = 12V$

Output current: $I_0 = \frac{P_0}{V_0} = \frac{24}{12} = 2A$

Inductor current: $I_L = I_0 = 2A$ (Buck dc-dc converter)

Inductor current ripple (peak − to − peak): $\Delta L = \frac{V_{in} - V_0}{L} \times D \times T_s$

$$\Rightarrow \Delta L = \left(\frac{40 - 12}{50 \cdot 10^{-6}}\right) \times 1.5 \cdot 10^{-6} = 0.84\ A$$

Thus: The incutor current waveform is 0.84A

- Maximum Current $= I_L + \frac{\Delta I_L}{2} = 2 + 0.42 = 2.42A$
- Minimum Current $= I_L - \frac{\Delta I_L}{2} = 2 - 0.42 = 1.58A$

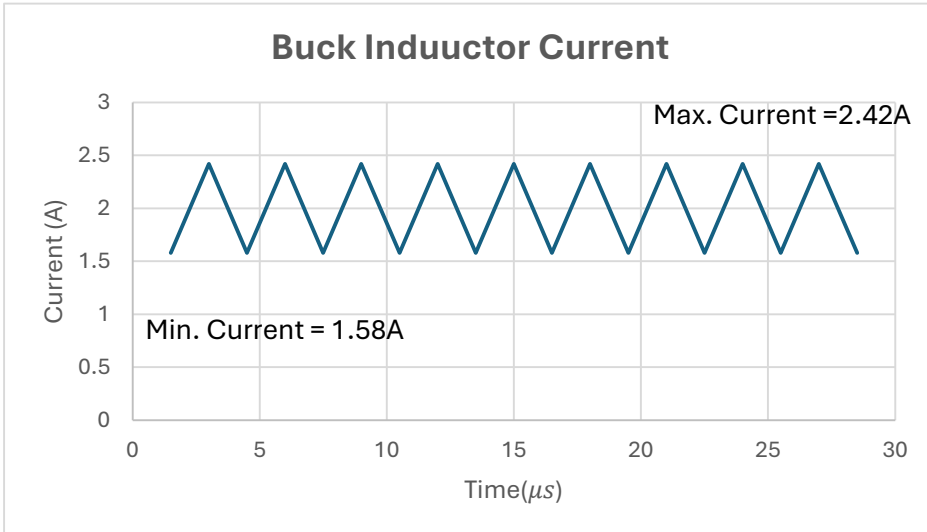

`Inductor voltage waveform:

- Switch on ($0 \leq t \leq DT_s = 1.5\mu s$)

$$v_1 = V_{in} - V_0 = 28V$$

- Switch on ($1.5 \leq t \leq 5\mu s$)

$$v_1 = -V_0 = -12V$$

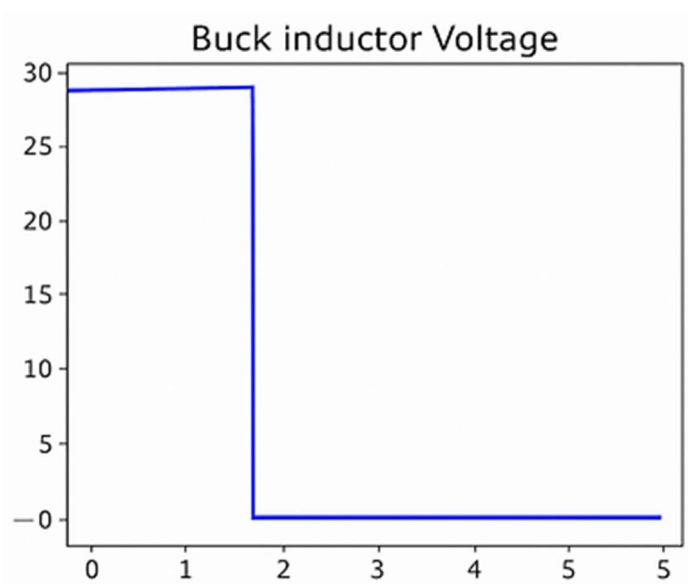

2) Calculate and draw the waveforms

- For $P_0 = 12W$

Output voltage: $V_0 = D \times V_{in} = 0.3 \times 40 = 12V$

Output current: $I_0 = \frac{P_0}{V_0} = \frac{12}{12} = 1A$

Inductor current: $I_L = I_0 = 1A$ (Buck dc-dc converter)

Inductor current ripple (peak − to − peak): $\Delta L = \frac{V_{in} - V_0}{L} \times D \times T_s$

$$\Rightarrow \Delta L = \left(\frac{40 - 12}{50 \cdot 10^{-}6}\right) \times 1.5 \cdot 10^{-}6 = 0.84\ A$$

Thus: The incutor current waveform is 0.84A

- Maximum Current $= I_L + \frac{\Delta I_L}{2} = 1 + 0.42 = 1.42A$
- Minimum Current $= I_L - \frac{\Delta I_L}{2} = 1 - 0.42 = 0.58A$

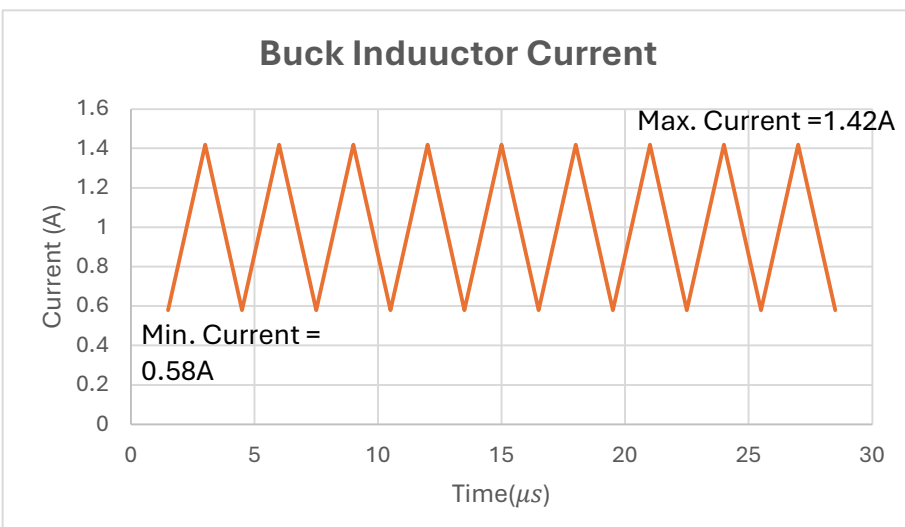

Inductor voltage waveform:

- Switch on ($0 \leq t \leq DT_s = 1.5\mu s$)

$$v_1 = V_{in} - V_0 = 28V$$

- Switch on ($1.5 \leq t \leq DT_s = 5\mu s$)

$$v_1 = -V_0 = -12V$$

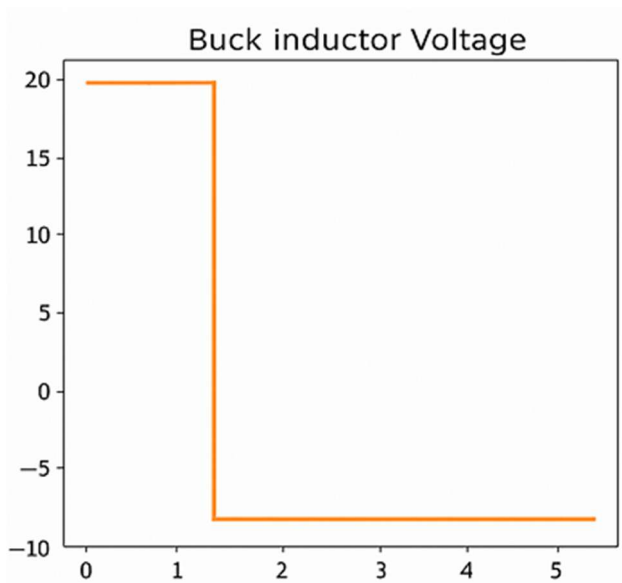

Therefore:

Case	Power (P_0)	Avg Inductor Current	Ripple (A)	% Ripple
1	24W	2A	0.84	42%
2	12W	1A	0.84	84%

- **Case 1:** When the power is bigger, so the %Ripple is small because the average current is higher.
- **Case 2:** When the power is small, so the %Ripple is small despite identical ripple amplitude, due to lower average current.

2. The Boost Dc-Dc converter

We have $L = 50\ \mu H = 50 \cdot 10^{-}6\ H$

$$V_{in} = 12V$$

$$D = 0.4$$

$$f_s = 200KHz = 200 \cdot 10^5 Hz \Rightarrow T_s = \frac{1}{f_s} = 5\mu s$$

1. Calvulate and draw the waveforms

Case study : Ideal components (No losses, perfect components like switching…)

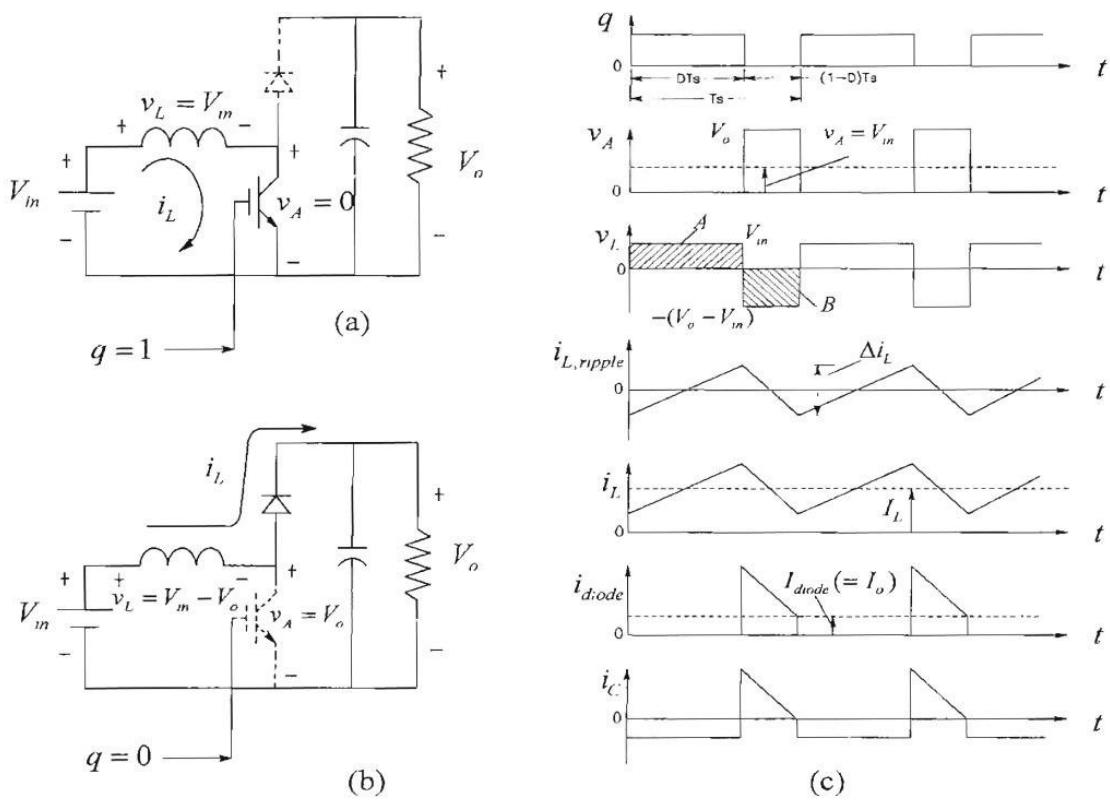

Figure 3-5 Boost converter: operation and waveforms.

- For $(P_0 = 30w)$

Output voltage:

$$V_o = \frac{V_{in}}{1 - D} = \frac{12}{0.6} = 20V$$

Output current:

$$I_o = \frac{30}{20} = 1.5A \text{ ; that } I_L = I_0$$

Input current:

$$I_{in} = \frac{P_o}{V_{in}} = \frac{30}{12} = 2.5A$$

Ripple:

$$\Delta I_L = \frac{V_{in} \cdot D \cdot T_s}{L} = \frac{12 \cdot 0.4 \cdot 5 \times 10^{-6}}{50 \times 10^{-6}} = 0.48A$$

$$I_{L,crit} = \frac{\Delta I_L}{2} = 0.24\ A$$

Inductor current:

- Maximum Current $= I_L + \frac{\Delta I_L}{2} = 2.5 + 0.24 = 2.74A$
- Minimum Current $= I_L - \frac{\Delta I_L}{2} = 2.5 - 0.24 = 2.26A$

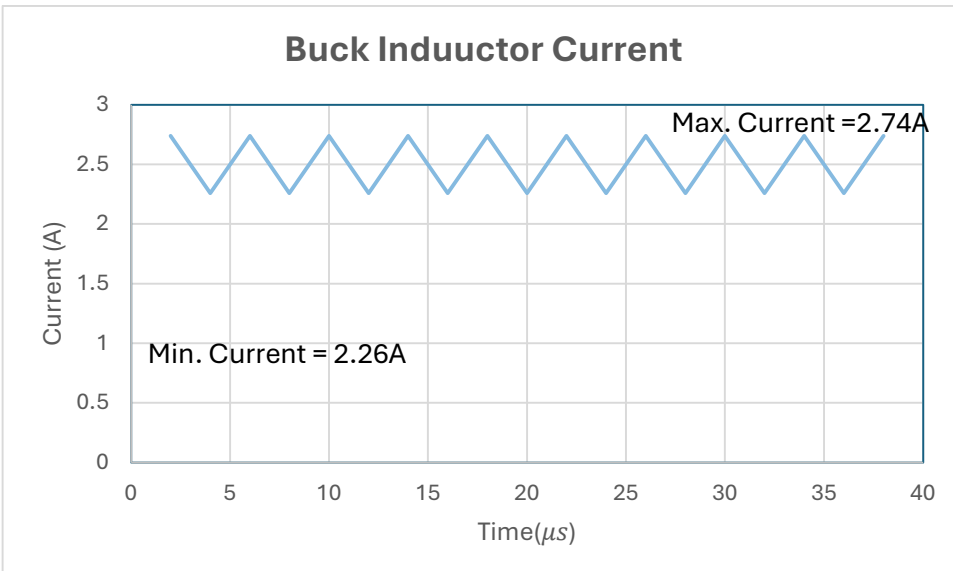

Inductor voltage waveform:

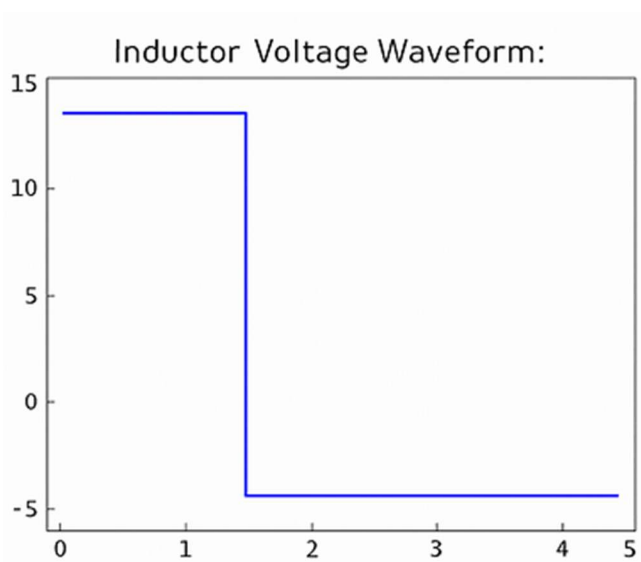

- Switch on ($0 \leq t \leq DT_s = 2\mu s$)

$$v_1 = V_{in} = 12V$$

- Switch on ($2 \leq t \leq 5\mu s$)

$$v_1 = V_{in} - V_0 = -8V$$

2. Draw the inductor voltage and current waveforms

- For $P_0 = 15w$

Output voltage:

$$V_o = \frac{V_{in}}{1 - D} = \frac{12}{0.6} = 20V$$

Output current:

$$I_o = \frac{15}{20} = 0.75A$$

Input current:

$$I_{in} = \frac{P_o}{V_{in}} = \frac{15}{12} = 1.25A$$

Ripple:

$$\Delta I_L = \frac{V_{in} \cdot D \cdot T_s}{L} = \frac{12 \cdot 0.4 \cdot 5 \times 10^{-6}}{50 \times 10^{-6}} = 0.48A$$

$$I_{L,crit} = \frac{\Delta I_L}{2} = 0.24\ A$$

Inductor current:

- Maximum Current $= I_L + \frac{\Delta I_L}{2} = 1.25 + 0.24 = 1.49A$
- Minimum Current $= I_L - \frac{\Delta I_L}{2} = 1.25 - 0.24 = 1.01A$

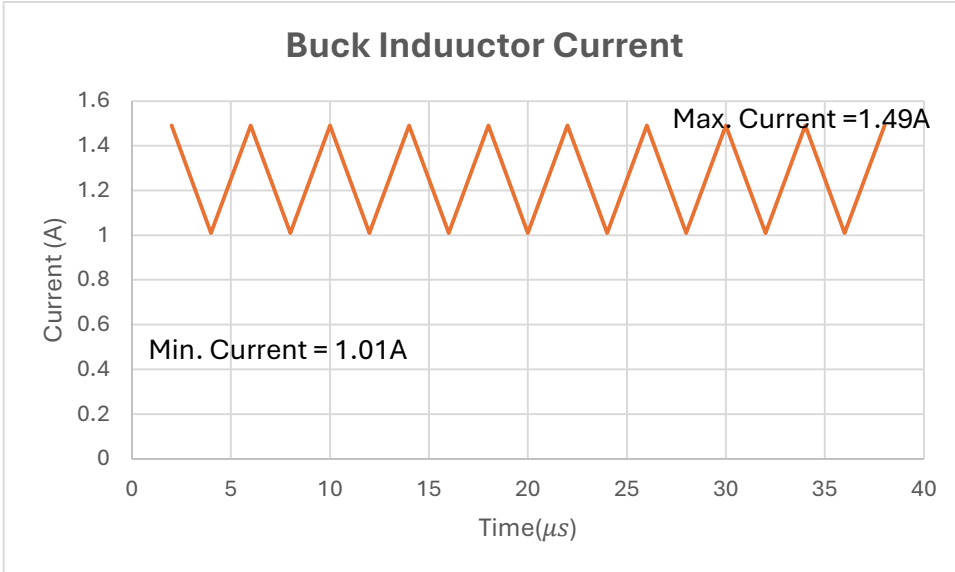

Inductor voltage waveform:

- Switch on ($0 \leq t \leq DT_s = 2\mu s$)

$$v_1 = V_{in} = 12V$$

- Switch on ($2 \leq t \leq 5\mu s$)

$$v_1 = V_{in} - V_0 = -8V$$

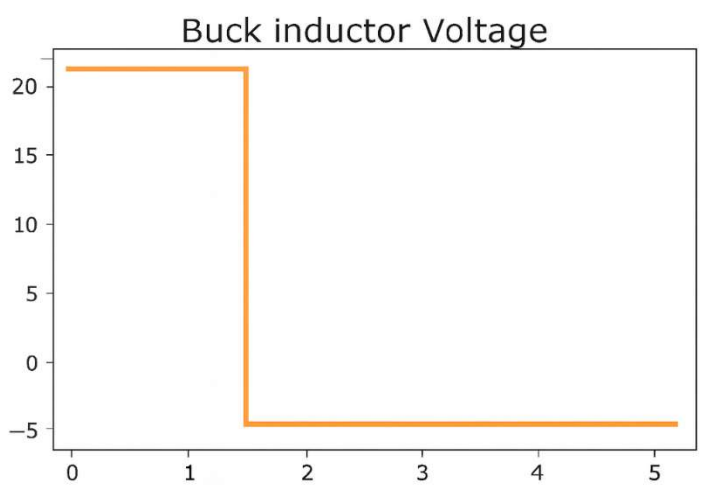

Therefore:

Case	Power (P_0)	Avg Inductor Current	Ripple (A)	% Ripple
1	30W	2.5A	0.48	19.2%
2	15W	1.25A	0.48	38.4%

- **Case 1:** When the power is bigger, so the %Ripple is small because the average current is higher.
- **Case 2:** When the power is small, so the %Ripple is small despite identical ripple amplitude, due to lower average current.
- Since $I_L = 1.25A > \frac{\Delta I_L}{2} = 0.24A$, the converter remains in continuous conduction mod (CCM).

3. Critical Output Power for DCM

$$P_o = V_{in} * I_0$$

That $V_0 = 20V$

$$I_{L,avg} = \frac{\Delta I_L}{2}$$

$$I_{L,avg} = \frac{I_0}{1-D} = \frac{I_0}{0.6}$$

$$\Rightarrow \quad I_0 = 0.24(0.6) = 0.144A$$

$$P_0 = 0.144 \times 20 = 2.88W$$

Thus: The output power for DCM is 2.88W

4 Critical Inductance for DCM at ($P_0 = 5W$)

We know:

$$Io = \frac{2}{5} = 0.25A$$

$$I_L = \frac{0.25}{0.6} = 0.417A$$

Boundary condition:

$$\Delta I_L = 2I_L = 0.834A$$

$$Lcrit = \frac{VinDT}{\Delta I_L}$$

$$L_{crit} = \frac{V_{(inD\ \ s)}}{\Delta I_L} Lcrit = \Delta ILVinDTsLcrit = 12(0.4)(5 \times 10 - 6)0.834$$

$$\Rightarrow L_{crit} = \frac{12(0.4)(5 \times 10^{-6})}{0.834}$$

$$\Rightarrow\ Lcrit = 0.83412(0.4)(5 \times 10^{-}6)$$

$$Lcrit \approx 28.8\mu H$$

Thus, The critical inductance at P_0 = $28.8\mu H$

Chapter4: Exercise

1. A constant torque of $5N$ is applied to an unloaded motor at rest at time $t = 0$. The motor reaches a speed of *1800 rpm* in *4s*. Assuming the damping to be negligible, calculate the motor inertia.
2. Consider an induction machine that has *2 poles* and is supplied by a rated voltage of *208 V* (line-to-line, rms) at the frequency of *60 Hz*. It i s operating in steady state and is loaded to its rated torque. Neglect the stator leakage impedance and the rotor leakage flux. The per-phase magnetizing current is *4.0 A (rms)*. The current drawn per-phase is *10 A (rms)* and is at an angle of *23.56 degrees* (lagging). Calculate the per-phase current if the mechanical load decreases so that the slip speed is one-half that of the rated case.

Solution:

1) Calculate the motor inertia

Given:

- Constant torque T=5 N·m
- Final speed $n_f = 1800\,rpm = 188.5\,rad/s$
- Initial speed $\omega_i = 0$
- Time t = 4 s
- Negligible damping

By T=J·α

Where:

$$\omega_f = \frac{2pin_f}{60} = 188.5\,rad/s$$

$$\alpha = \frac{(\omega_f - \omega_i)}{\mathrm{t}} = \frac{188.5 - 0}{4} = 47.125 \frac{rad}{s^2}$$

So, $$J = \frac{T}{\alpha} = \frac{5}{47.125} = 0.1061\ kg\ m^2$$

Thus: The motor inertia is $0.1061\ kg\ m^2$

2) Calculate the per-phrase current

Given:

- 2-pole machine, 60 Hz → synchronous speed Ns=3600 rpm
- Magnetizing current I_m=4.0 A
- Rated current I=10 A at θ=23.56∘ lagging

At rated load:

$$I_r = \sqrt{(10^2 + 4^2 - 2 \cdot 10 \cdot 4 \cdot cos(23.56 \circ))} \approx 6.78\ A$$

If slip is halved, rotor current scales linearly:

$$I_{r,new} = \frac{1}{2} 6.78 = 3.39\ A$$

Total current:

`

$$I_r = \sqrt{(3.39^2 + 4^2 - 2 \cdot 3.39 \cdot 4 \cdot cos(23.56 \circ))} \approx 7.24\ A$$

Thus: The new per-phrase current is 7.24A

Project

1. Write an Arduino code that will be able to control a dc motor in Proteus Professional:

a) Asks the user to enter a value between 0 and 255 rpm and returns an error if not in this range
b) Controls the speed of the motor based on the entered value.
c) Demonstrate that the code is properly working

Solution

a)

Components parts:

- LCD
- Arduino R3
- Motor
- Battery 12V
- L293D
- Variable Resistor
- Visual Terminal

Connection:

Arduino Pin	Connects To
9	LCD RS
8	LCD EN
4-7	LCD D4–D7
12	L293D EN1
10	L293D IN1
11	L293D IN2
TX (1)	Serial RXD
RX (0)	Serial TXD
GND	Shared ground
5V	LCD and L293D VSS
12V	L293D VS

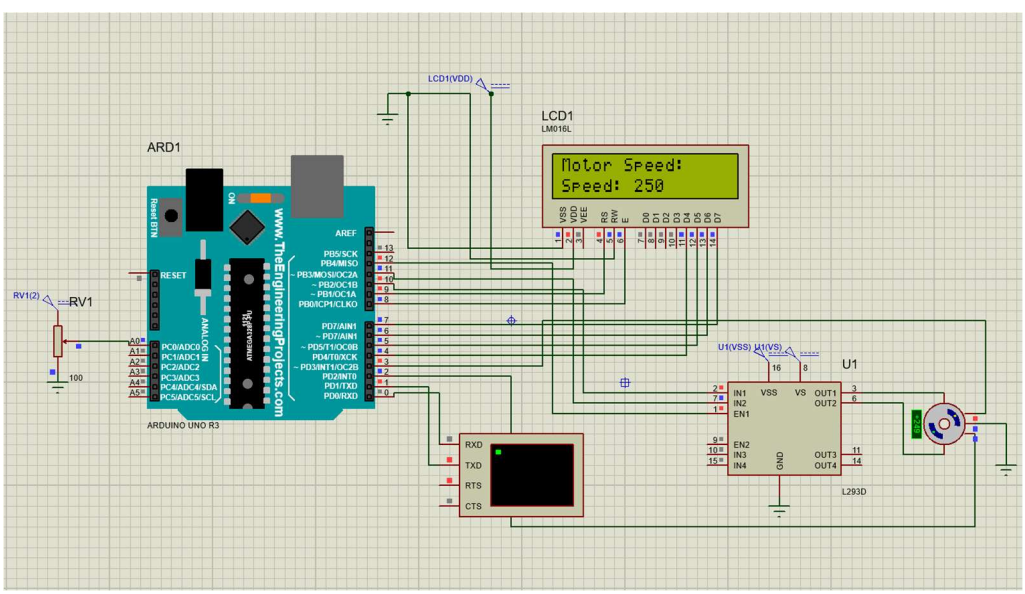

b)

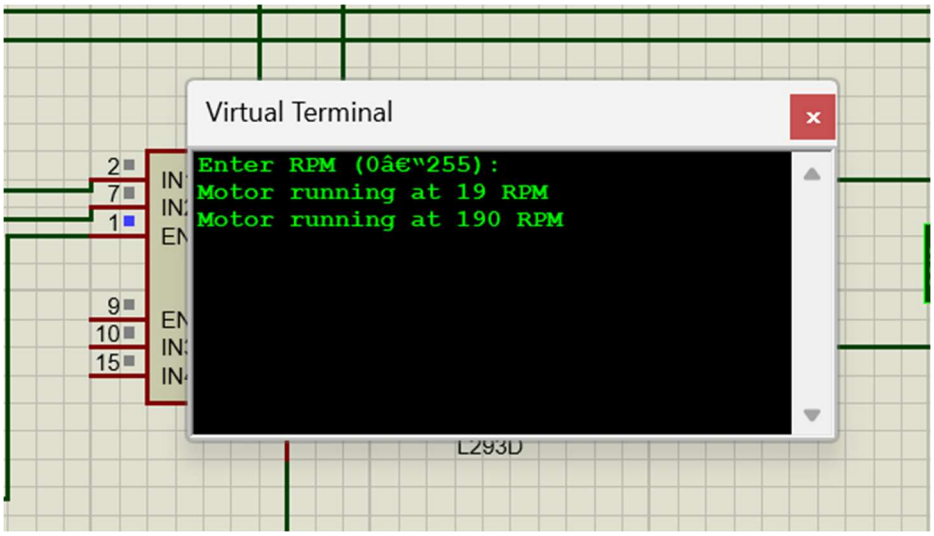
Virtual Terminal
Enter RPM (0â€"255):
Motor running at 19 RPM
Motor running at 190 RPM
L293D

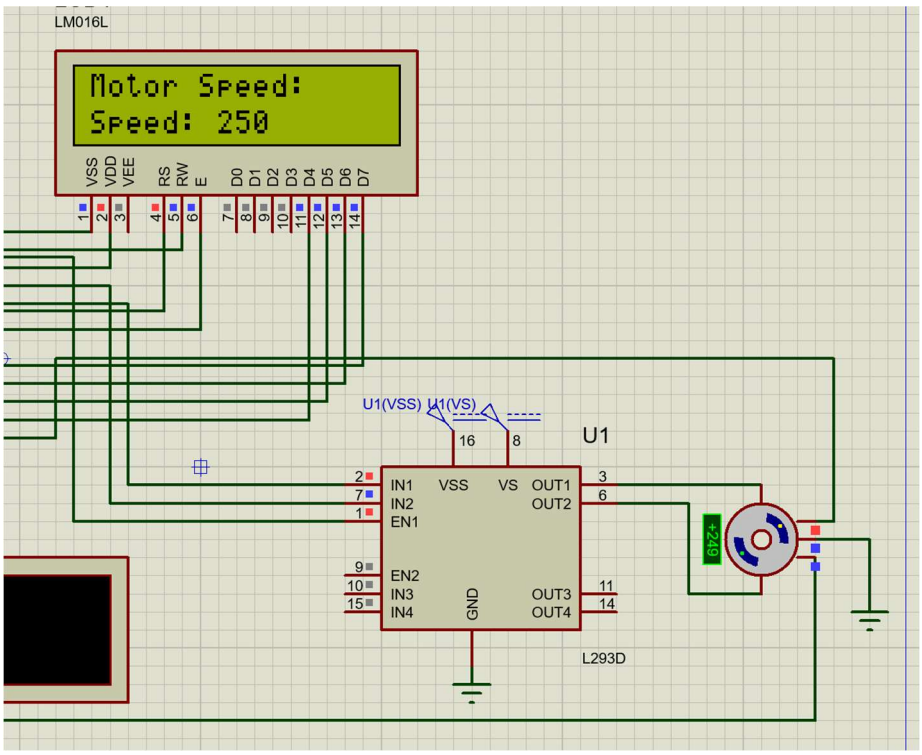
LM016L
Motor Speed:
Speed: 250
VSS VDD VEE RS RW E D0 D1 D2 D3 D4 D5 D6 D7
U1(VSS) U1(VS)
U1
IN1 IN2 EN1 EN2 IN3 IN4
VSS VS GND
OUT1 OUT2 OUT3 OUT4
L293D
+249

C) Show the code

```
#include <LiquidCrystal.h>

// LCD pin setup: RS, E, D4, D5, D6, D7
LiquidCrystal lcd(9, 8, 4, 5, 6, 7);

// Motor control pins
const int EN1 = 12;     // Use a PWM-capable pin for ENA
const int IN1 = 10;    // Direction pin 1
const int IN2 = 11;    // Direction pin 2

int speedValue = 0;

void setup() {
  pinMode(EN1, OUTPUT);
  pinMode(IN1, OUTPUT);
  pinMode(IN2, OUTPUT);

  // Set motor direction (forward)
  digitalWrite(IN1, HIGH);
  digitalWrite(IN2, LOW);

  lcd.begin(16, 2);
  lcd.print("Motor Speed:");
}

void loop() {
  // Ramp up speed from 0 to 255
  for (speedValue = 0; speedValue <= 255; speedValue += 10) {
    setMotorSpeed(speedValue);
    delay(500); // shorter delay for smoother update
  }

  // Ramp down speed from 255 to 0
  for (speedValue = 255; speedValue >= 0; speedValue -= 10) {
    setMotorSpeed(speedValue);
    delay(500);
  }
}

// Function to set motor speed and update LCD at the same time
void setMotorSpeed(int value) {
  analogWrite(EN1, value); // Motor speed
  lcd.setCursor(0, 1);
  lcd.print("Speed: ");
  lcd.print(value);
  lcd.print("   "); // Clear trailing digits
}

```

- **Line 1:** We call the **LiquidCrystal library**, which gives you functions to control a standard 16x2 LCD in 4-bit mode.
- **Line 4:** It is the position of pin that we connect between Arduino R3 and the LCD16x2.
- **Line 7 to 8:** It is the position of L293D and Arduino R3.
- Command **"Void setup ()"** we use this code prepares the hardware and software before the main program starts looping. We can know which one is input and output.
- Command "**Void loop ()"** it is conditionals case that we put. We have 2 conditionals like the speed up from 0 to 255 rpms and the speed down from 255 to 0 rpms.
- Word "**Delay (500)"** it is 5 second delay before the motor work and count 10 up to 255rpms.
- **Line 40 to 46:** his function updates both motor and LCD at the same time.
  1. Sets the motor speed using PWM.
  2. Moves the LCD cursor to the right spot like "print("Speed")".
  3. Displays the current speed on the LCD like "print("value")".
  4. Cleans up old digits so the display matches the motor speed exactly.